SS3040LFL

3.0A Low V_F Schottky Barrier Rectifier

Primary Characteristics

I_F	3.0	A
V_{RRM}	40	V
I_{FSM}	50.0	A
V_F	0.47	V

Package Outline Dimensions

SOD-123FL

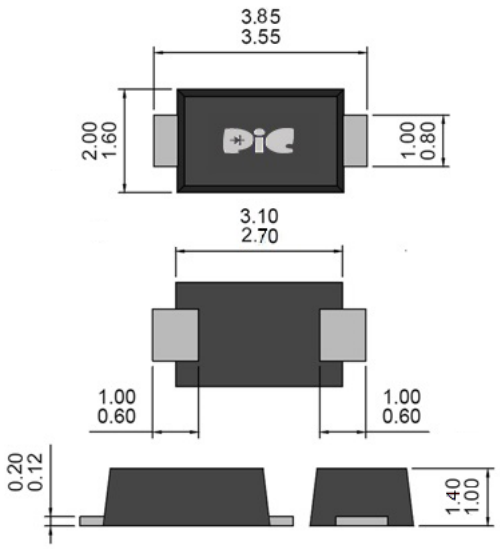

Unit : millimeters

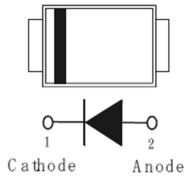

Features

- Ultra low forward voltage drop, low power loss
- Fast switching speed
- Surface mount package
- Ultra thin profile package for space constrained utilization
- Lead free in compliance with EU RoHS2.0 (2011/65/EU & 2015/865/EU directive)
- Green molding compound as per IEC61249 Std. . (Halogen Free)

Mechanical Data

- Case: Molded plastic, SOD-123FL
- Terminals: Solderable per MIL-STD-750, Method 2026

Maximum Ratings (TA=25°C unless otherwise noted)

Parameter	Symbol	SS3040LFL	UNITS
Maximum Recurrent Peak Reverse Voltage	V_{RRM}	40	Volts
Maximum rms voltage	V_{RMS}	28	Volts
Maximum dc blocking voltage	V_R	40	Volts
Maximum average forward rectified current	$I_{F(AV)}$	3	Amps
Peak forward surge current : 8.3ms single half sinewave Superimposed on rated load	I_{FSM}	50	Amps
Typical thermal resistance (Note 2) (Note 1)	$R_{\Theta JC}$ $R_{\Theta JA}$	20 185	°C/W
Operating junction temperature range	T_J	-55 to +150	°C
Storage temperature range	T_{STG}	-55 to +150	°C

Electrical Characteristic

PARAMETER	SYMBOL	TEST CONDITION		TYP.	MAX.	UNIT
Forward voltage	V_F	I_F = 10mA	T_J =25 °C	0.21	-	V
		I_F = 1A		0.35	-	
		I_F = 3A		-	0.47	
		I_F = 10mA	T_J =125 °C	0.06	-	V
		I_F = 1A		0.27	-	
Reverse current (Note 3)	I_R	V_R = 10V	T_J=25°C	16	-	µA
		V_R = 20V		21	-	
		V_R = 30V		35	-	
		V_R = 40V		-	150	
		V_R = 20V	T_J =125 °C	5.1	-	mA
		V_R = 30V		7.6	-	
		V_R = 40V		12	-	

Notes: (1) Mounted on a FR4 PCB, single-sided copper, mini pad.
(2) Mounted on a FR4 PCB, single-sided copper, with 100cm² copper pad area
(3) Short duration pulse test used to minimize self-heating effect.

Rating & Characteristic Curves

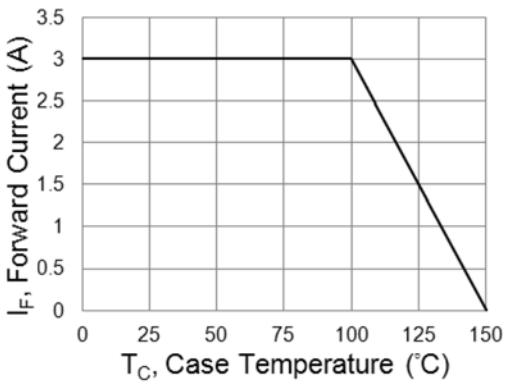

Fig. 1 Forward Current Derating Curve

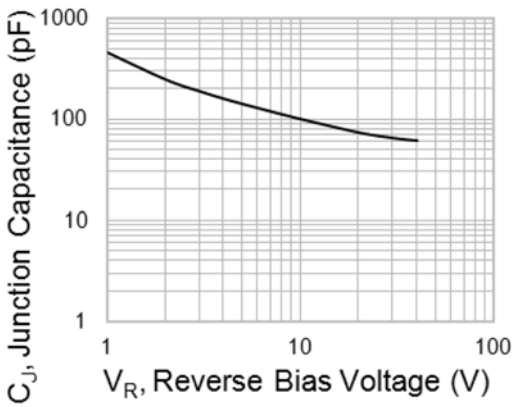

Fig. 2 Typical Junction Capacitance

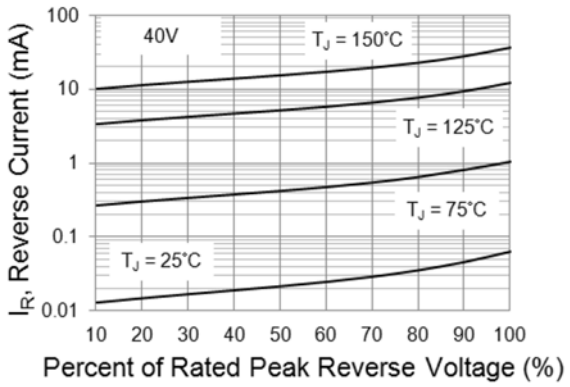

Fig. 3 Typical Reverse Characteristics

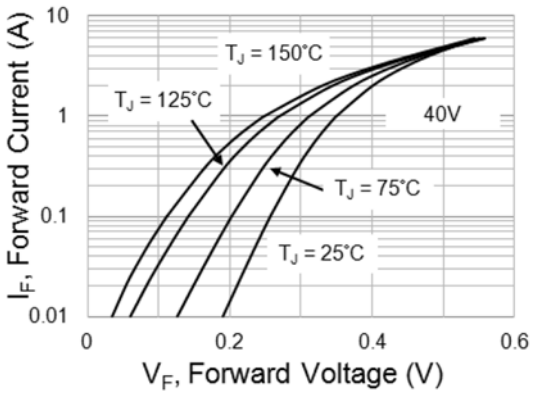

Fig. 4 Typical Forward Characteristics

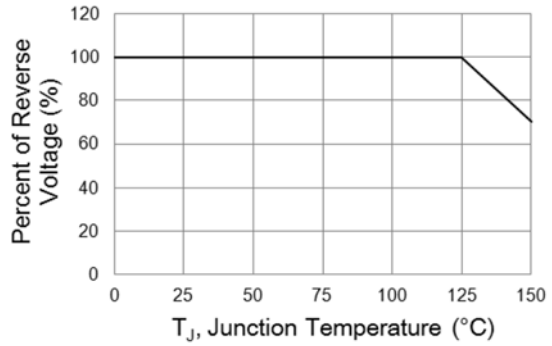

Fig. 5 Operating Temperature Derating Curve

Pad Layout

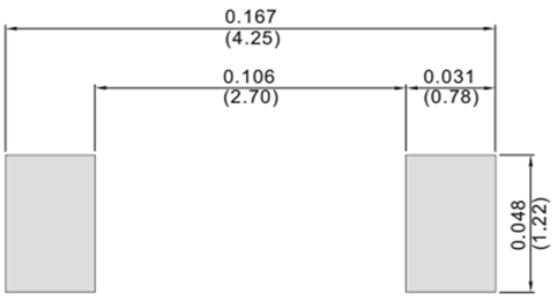

Unit: mm

Packaging Specifications

Package	W (mm)	A (mm)	B (mm)	C (mm)	d1 (mm)	d (mm)	E (mm)	F (mm)	P (mm)	P0 (mm)	P1 (mm)	T (mm)
SOD-123FL	8±0.2	2.00±0.1	3.85±0.1	1.1±0.1	1.0	1.50±0.1	1.75±0.1	3.5±0.05	4±0.1	4±0.05	2±0.05	0.23±0.05
SOD-123HE	8±0.3	2.00±0.1	4.00±0.1	1.45±0.1	1.0	1.55±0.1	1.75±0.1	3.5±0.05	4±0.1	4±0.10	2±0.05	0.23±0.10
SOD-323FL	8±0.2	1.37±0.1	2.75±0.1	0.85±0.1	1.00	1.60±0.1	1.75±0.1	3.50±0.05	4±0.1	4±0.10	-	0.20±0.10
SOD-323HE	8±0.3	1.60±0.1	2.80±0.1	0.95±0.1	1.0	1.50±0.1	1.75±0.1	3.5±0.05	4±0.1	4±0.10	2±0.05	0.23±0.10
SMAF	12±0.3	2.9±0.1	5.5±0.1	2.1±0.1	1.5	1.55±0.1	1.75±0.1	5.5±0.05	4±0.1	4±0.10	2±0.05	0.23±0.10
SMA-S	12±0.2	2.65±0.1	5.25±0.1	1.35±0.1	1.0	1.55±0.1	1.75±0.1	5.5±0.05	4±0.1	4±0.05	2±0.05	0.23±0.10
SMA-HE	12±0.2	2.65±0.1	5.25±0.1	1.35±0.1	1.0	1.55±0.1	1.75±0.1	5.5±0.05	4±0.1	4±0.05	2±0.05	0.23±0.10

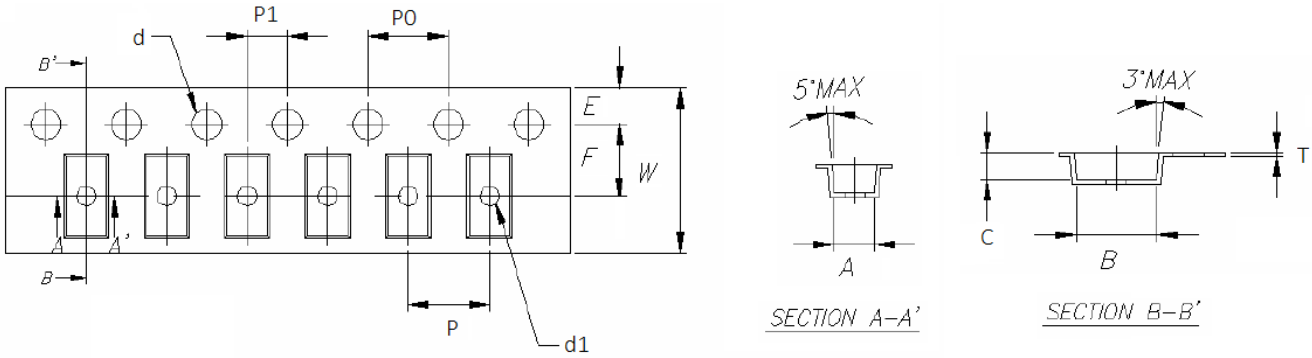

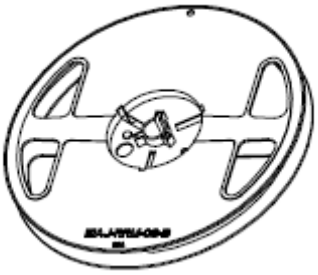

Package	D (max.) (mm)	D1 (min.) (mm)	D2 (mm)	G (min.) (mm)	W1 (min.) (mm)
SOD-123FL	178	50.0	13.0±0.2	8.4	11.4
SOD-123HE	178	50.0	13.0±0.2	8.4	11.4
SOD-323FL	178	50.2	13.0±0.2	8.0	11.5
SOD-323HE	178	50.0	13.0±0.2	8.4	11.4
SMAF	178	50.0	13.0±0.2	12.4	18.0
	330	50.0	13.0±0.2	12.4	18.0
SMA-S	178	50.0	13.0±0.2	12.4	18.0
SMA-HE	178	50.0	13.0±0.2	12.4	18.0

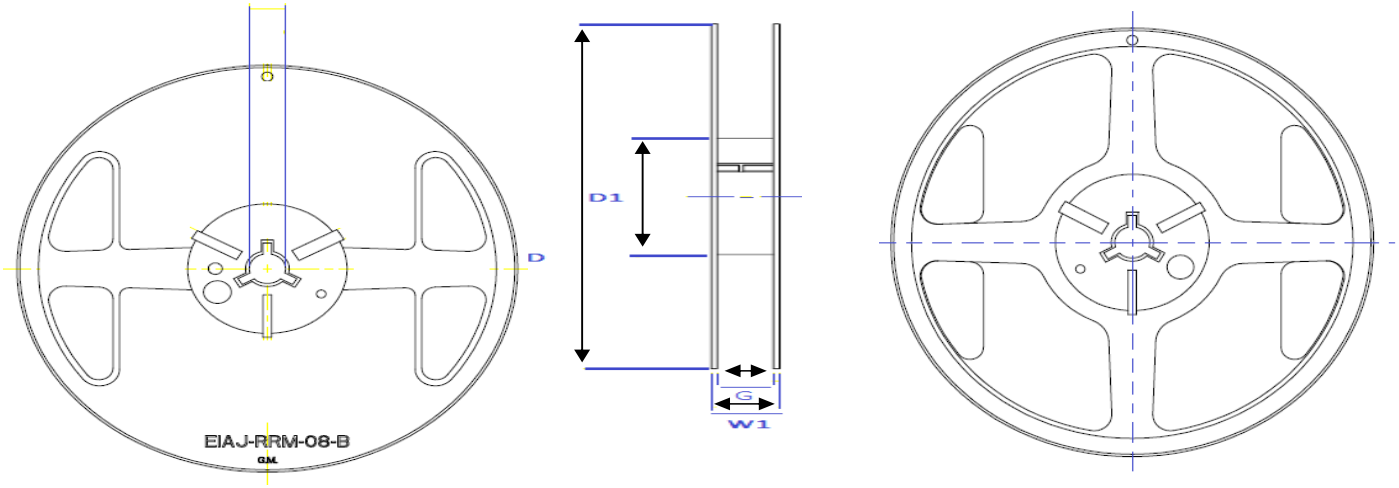

Recommand IR Reflow Soldering Thermal Profile

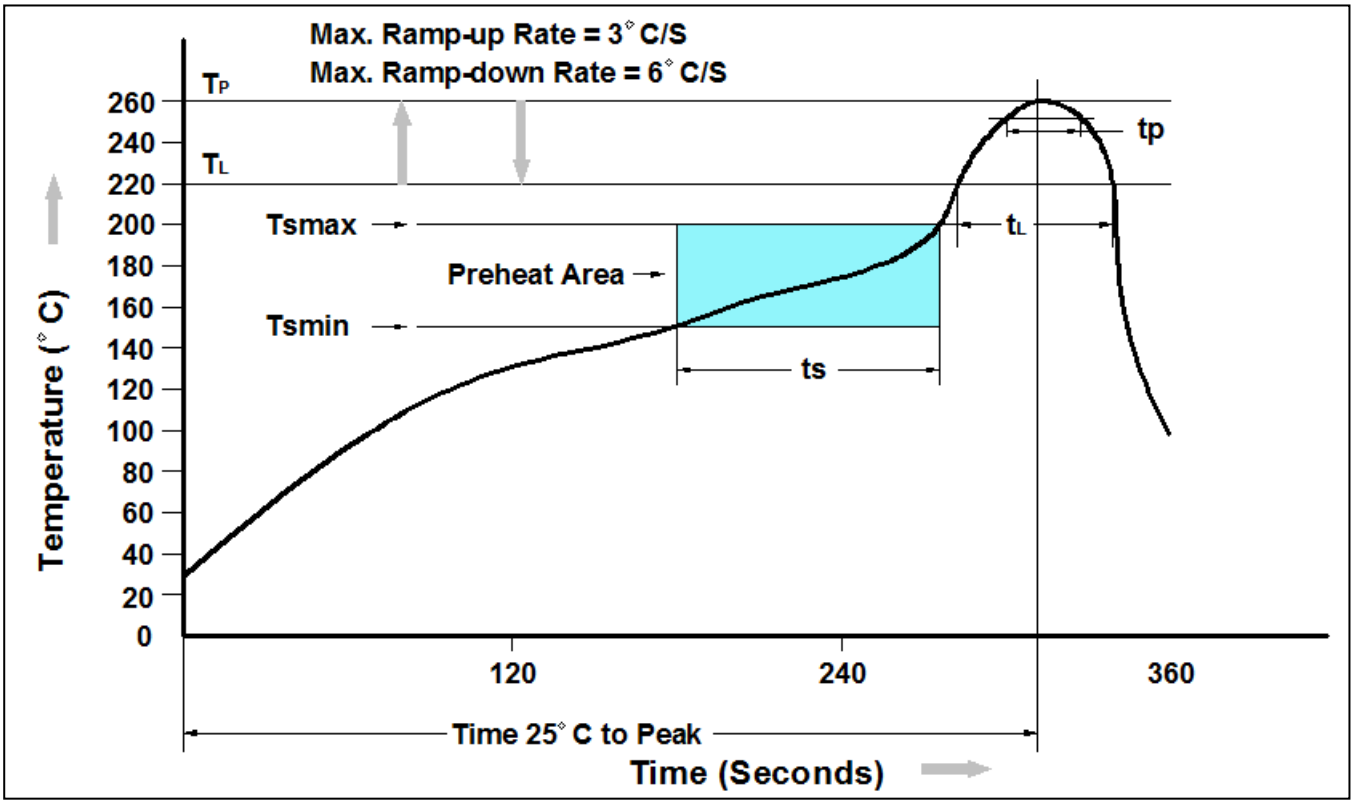

Profile Feature	Pb-Free Assembly Profile
Temperature Min. (Tsmin)	150°C
Temperature Max. (Tsmax)	200°C
Time (ts) from (Tsmin to Tsmax)	60-120 seconds
Average Ramp-up Rate (tL to tP)	3°C/second max.
Liquidous Temperature (TL)	217°C
Time (tL) Maintained Above (TL)	60 – 150 seconds
Peak Temperature	260°C +0°C / -5°C
Time (tP) within 5°C of actual Peak Temperature	30 seconds
Ramp-down Rate (TP to TL)	6°C/second max
Time 25°C to Peak Temperature	8 minutes max.

Ordering Information

Part Number	Description	Quantity
SS3040LFL	SOD-123FL Reel	3000 pcs

DISCLAIMER

- The information in this document and any product described herein are subject to change without notice and should not be construed as a commitment by Paceleader, Paceleader reserve the right to make changes to the information in this document.

- Though Paceleader make effort to improve product quality and reliability, Product can malfunction and fail due to their inherent electrical sensitivity and vulnerability to physical stress, it is the responsibility of the customer, when utilizing Paceleader products, to comply with the standards of safety in making a safe design for entire system and to avoid situation in which a malfunction or failure., In developing a new designs, customer should ensure that the device which shown in this documents are used within specified operating ranges.

- The information contained herein is presented only as a guide for the applications of our products. No responsibility is assumed by Paceleader for any infringements of patents or other rights of the third parties which may result from its use.