SS2020FL THRU SS20100FL

2.0A Schottky Barrier Rectifier

Primary Characteristics

I_F	2.0	A
V_{RRM}	20~100	V
I_{FSM}	50.0	A
V_F	0.50~0.85	V

Package Outline Dimensions

SOD-123FL

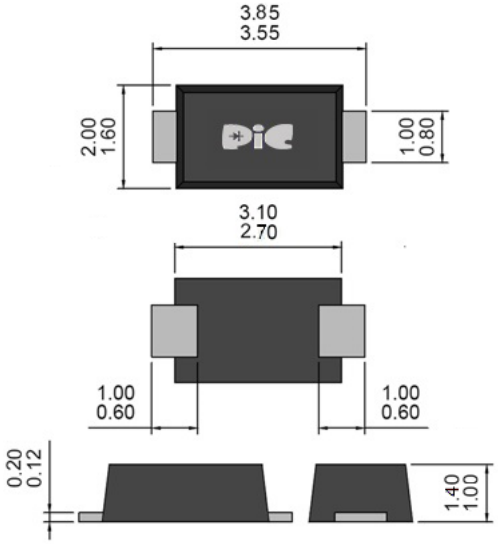

Unit : millimeters

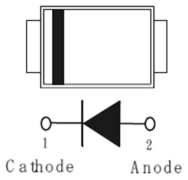

Features

- Fast switching speed
- Surface mount package suited for automatic insertion
- Low power loss, high efficiency
- Lead-free & halogen-free parts, RoHS compliant

Mechanical Data

- Epoxy: UL94V-0 rated flame retardant
- Case: Molded Plastic
- Terminals:Solder plated solderable per MIIL-STD-750 Method 2026
- Mounting position: Any
- Polarity: Color band denotes cathode end

Maximum Ratings (TA=25°C unless otherwisenoted)

	Symbol	SS2020FL	SS2040FL	SS2060FL	SS20100FL	UNITS
Reverse Voltage	V_R	20	40	60	100	Volts
Peak Reverse Voltage	V_{RRM}	20	40	60	100	Volts
Average Rectified Current at T_A=75 ^oC	$I_{F(AV)}$	2.0				Amps
Non-Repetitive Peak Forward Surge Current at t=8.3ms	I_{FSM}	50.0				Amps
Max. Forward Voltage at 2.0A	V_F	0.50		0.70	0.85	Volts
Reverse Leakage Current at V_{RRM}	I_R	100		40		μA
Typical Thermal Resistance, Junction to Ambient(Note 1)	$R_{\Theta JA}$	60				$^oC/W$
Operating Junction and Storage Temperature Range	T_J, T_{STG}	-55~+125				^oC

Notes:

(1) Mounted with minimum recommennd ded pas size, PC Board FR4.

(2) TA=25℃ unless otherwise specifiedd. .

Rating and Characteristics Curves

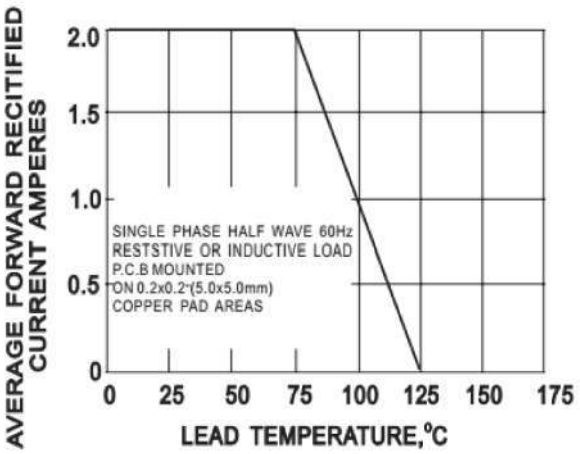

Fig. 1 Forward Current Derating Curve

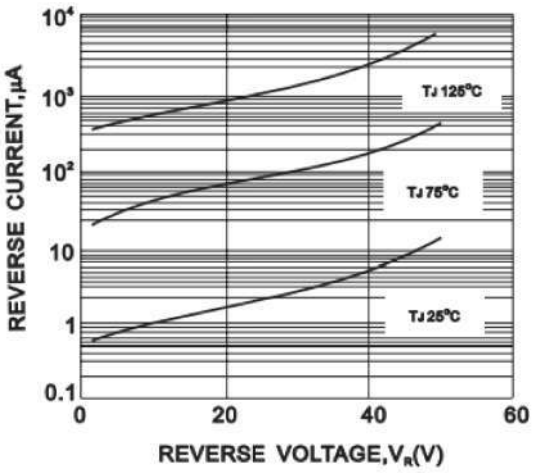

Fig. 2 Typical Junction Capacitance

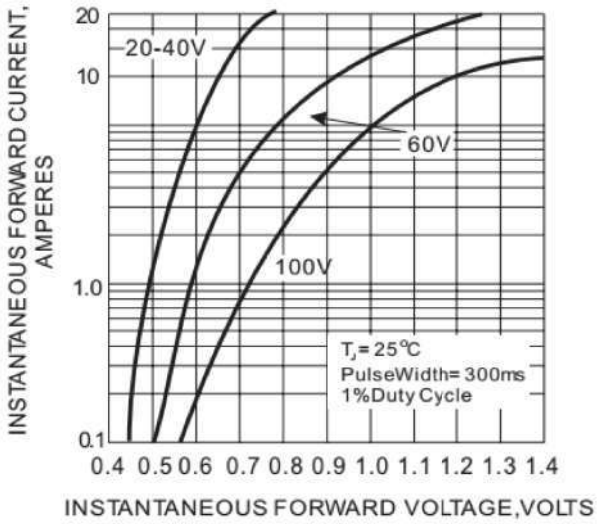

Fig.3 Typical Reverse Characcteristics

Pad Layout

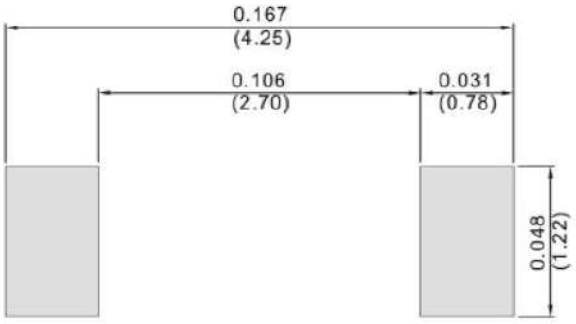

Unit: mm

Packaging Specifications

Package	W (mm)	A (mm)	B (mm)	C (mm)	d1 (mm)	d (mm)	E (mm)	F (mm)	P (mm)	P0 (mm)	P1 (mm)	T (mm)
SOD-123FL	8±0.2	2.00±0.1	3.85±0.1	1.1±0.1	1.0	1.50±0.1	1.75±0.1	3.5±0.05	4±0.1	4±0.05	2±0.05	0.23±0.05
SOD-123HE	8±0.3	2.00±0.1	4.00±0.1	1.45±0.1	1.0	1.55±0.1	1.75±0.1	3.5±0.05	4±0.1	4±0.10	2±0.05	0.23±0.10
SOD-323FL	8±0.2	1.37±0.1	2.75±0.1	0.85±0.1	1.00	1.60±0.1	1.75±0.1	3.50±0.05	4±0.1	4±0.10	-	0.20±0.10
SOD-323HE	8±0.3	1.60±0.1	2.80±0.1	0.95±0.1	1.0	1.50±0.1	1.75±0.1	3.5±0.05	4±0.1	4±0.10	2±0.05	0.23±0.10
SMAF	12±0.3	2.9±0.1	5.5±0.1	2.1±0.1	1.5	1.55±0.1	1.75±0.1	5.5±0.05	4±0.1	4±0.10	2±0.05	0.23±0.10
SMA-S	12±0.2	2.65±0.1	5.25±0.1	1.35±0.1	1.0	1.55±0.1	1.75±0.1	5.5±0.05	4±0.1	4±0.05	2±0.05	0.23±0.10
SMA-HE	12±0.2	2.65±0.1	5.25±0.1	1.35±0.1	1.0	1.55±0.1	1.75±0.1	5.5±0.05	4±0.1	4±0.05	2±0.05	0.23±0.10

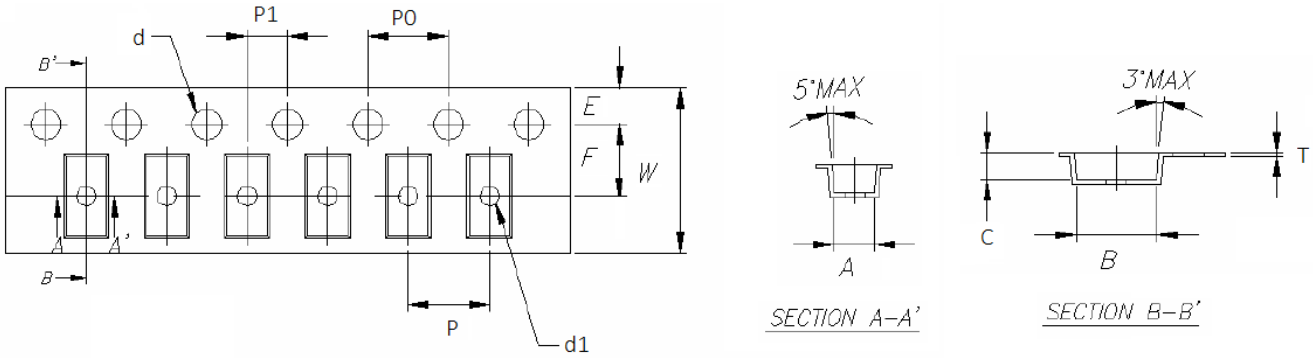

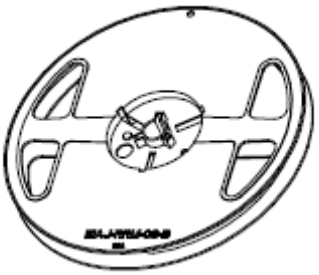

Package	D (max.) (mm)	D1 (min.) (mm)	D2 (mm)	G (min.) (mm)	W1 (min.) (mm)
SOD-123FL	178	50.0	13.0±0.2	8.4	11.4
SOD-123HE	178	50.0	13.0±0.2	8.4	11.4
SOD-323FL	178	50.2	13.0±0.2	8.0	11.5
SOD-323HE	178	50.0	13.0±0.2	8.4	11.4
SMAF	178	50.0	13.0±0.2	12.4	18.0
	330	50.0	13.0±0.2	12.4	18.0
SMA-S	178	50.0	13.0±0.2	12.4	18.0
SMA-HE	178	50.0	13.0±0.2	12.4	18.0

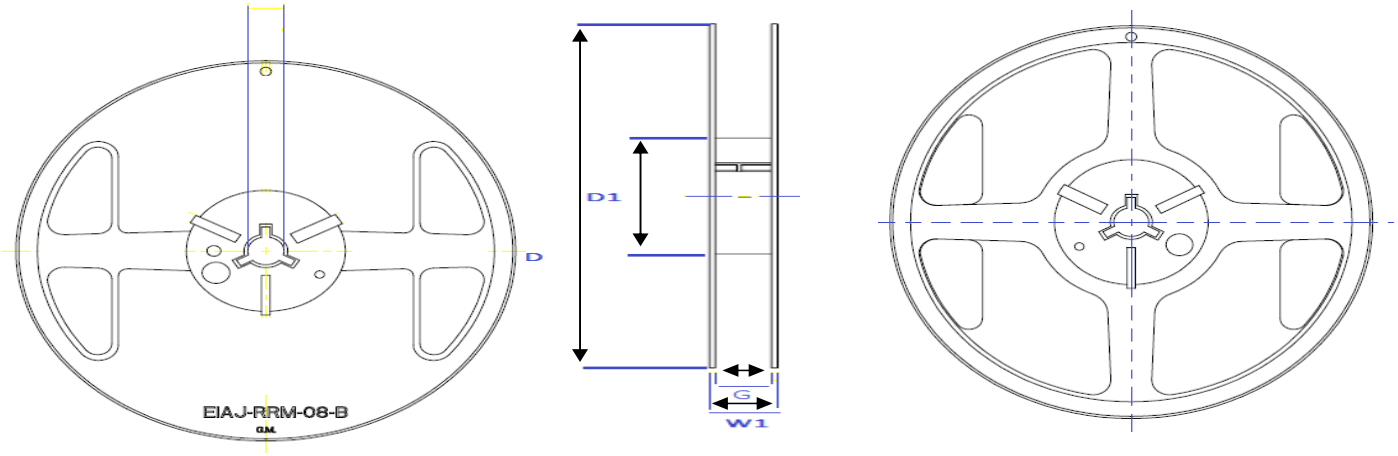

Recommand IR Reflow Soldering Thermal Profile

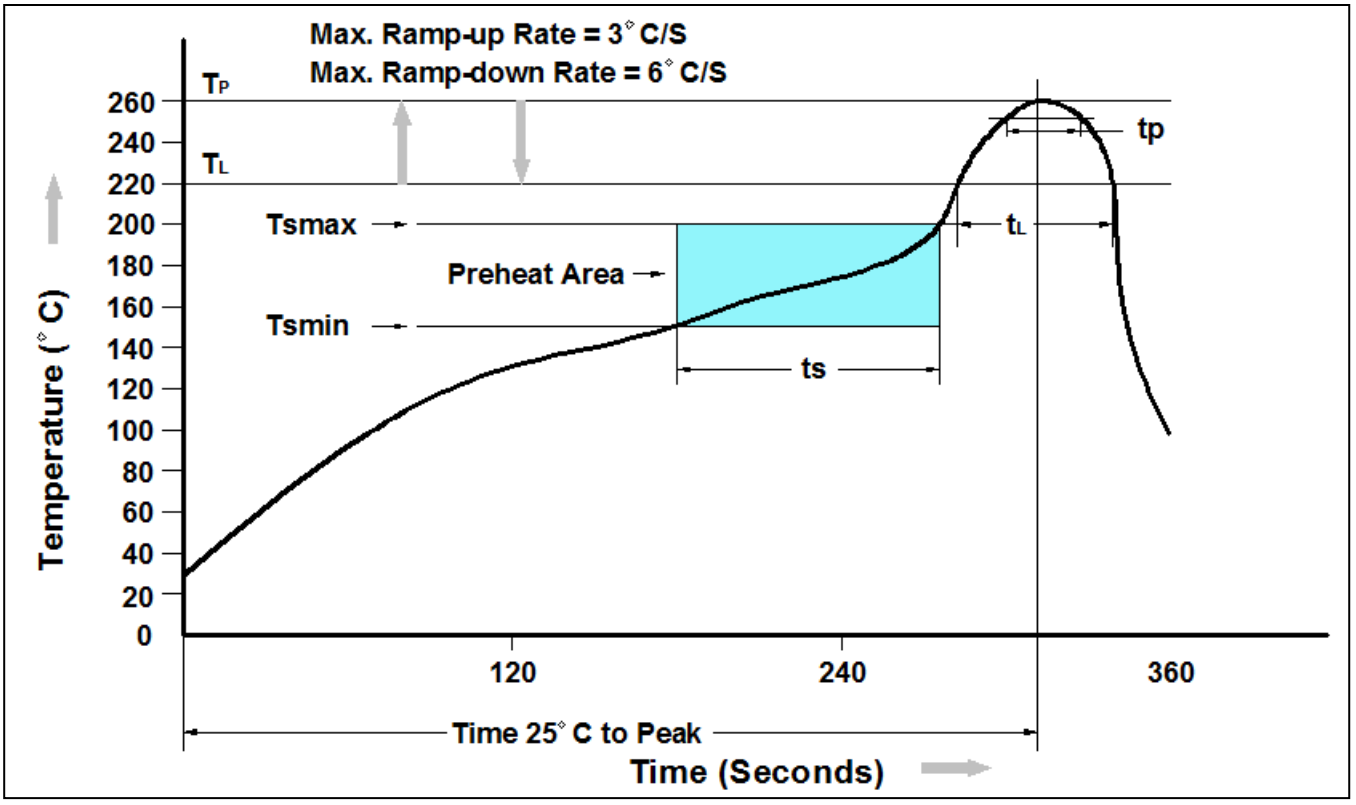

Profile Feature	Pb-Free Assembly Profile
Temperature Min. (Tsmin)	150°C
Temperature Max. (Tsmax)	200°C
Time (ts) from (Tsmin to Tsmax)	60-120 seconds
Average Ramp-up Rate (tL to tP)	3°C/second max.
Liquidous Temperature (TL)	217°C
Time (tL) Maintained Above (TL)	60 – 150 seconds
Peak Temperature	260°C +0°C / -5°C
Time (tP) within 5°C of actual Peak Temperature	30 seconds
Ramp-down Rate (TP to TL)	6°C/second max
Time 25°C to Peak Temperature	8 minutes max.

Ordering Information

Part Number	Description	Quantity
SS2020FL~SS20100FL	SOD-123FL Reel	3000 pcs

DISCLAIMER

- The information in this document and any product described herein are subject to change without notice and should not be construed as a commitment by Paceleader, Paceleader reserve the right to make changes to the information in this document.

- Though Paceleader make effort to improve product quality and reliability, Product can malfunction and fail due to their inherent electrical sensitivity and vulnerability to physical stress, it is the responsibility of the customer, when utilizing Paceleader products, to comply with the standards of safety in making a safe design for entire system and to avoid situation in which a malfunction or failure., In developing a new designs, customer should ensure that the device which shown in this documents are used within specified operating ranges.

- The information contained herein is presented only as a guide for the applications of our products. No responsibility is assumed by Paceleader for any infringements of patents or other rights of the third parties which may result from its use.