GS1000FL THRU GS1010FL

1.0A General Purpose Rectifier

Primary Characteristics

I_F	1.0	A
V_{RRM}	50~1000	V
I_{FSM}	30	A
V_F	1.0	V

Features

- For surface mounted applications
- Low profile package
- Ideal for automated placement
- Glass Passivated Chip Junction
- High temperature soldering : 260℃/10 seconds at terminals
- Lead-free & halogen-free parts, RoHS compliant

Mechanical Data

- Epoxy: UL94V-0 rated flame retardant
- Case:Molded Plastic
- Terminals: Solder plated solderable per MIL-STD-750 Method 2026
- Mounting position: Any
- Polarity: Color band denotes cathode end
- Weight: approx.. 0.0166 grams

Package Outline Dimensions

SOD-123FL

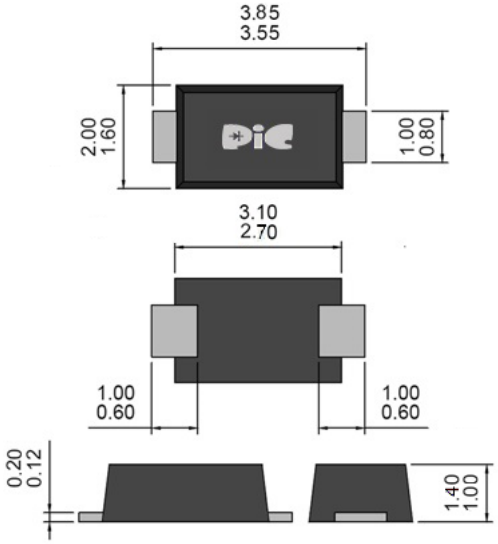

Unit : millimeters

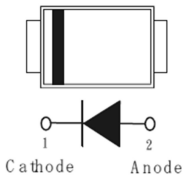

Maximum Ratings & Electrical Characteristic

	Symbol	GS1000FL	GS1001FL	GS1002FL	GS1004FL	GS1006FL	GS1008FL	GS1010FL	UNITS
Marking Code	-	1A	1B	1D	1G	1J	1K	1M	-
Recurrent Peak Reverse Voltage	V_{RRM}	50	100	200	400	600	800	1000	Volts
RMS Voltage	V_{RMS}	35	70	140	280	420	560	700	Volts
DC Blocking Voltage	V_{DC}	50	100	200	400	600	800	1000	Volts
Average Forward Current (Note 1)	$I_{F(AV)}$	1.0							Amps
Peak Forward Surge Current 8.3ms single half sine-wave superimposed on rated load(JEDEC Method)	I_{FSM}	30.0							Amps
Max. Forward Voltage at 1.0A	V_F	1.0							Volts
Max. DC Reverse Current T_J= 25℃ Rated DC Blocking Voltage	I_R	1							μA
Typical Thermal Resistance (Note 2)	$R_{\Theta JA}$	65							°C/W
Operating Junction and Storage Temperature Range	T_J, T_{STG}	-50 ~ +150							°C

Notes:

(1) Pulse test: 300u pulse with, 1% duty cycle.

(2) Soldering land: 6mm x 6mm.

Rating and Characteristics Curves

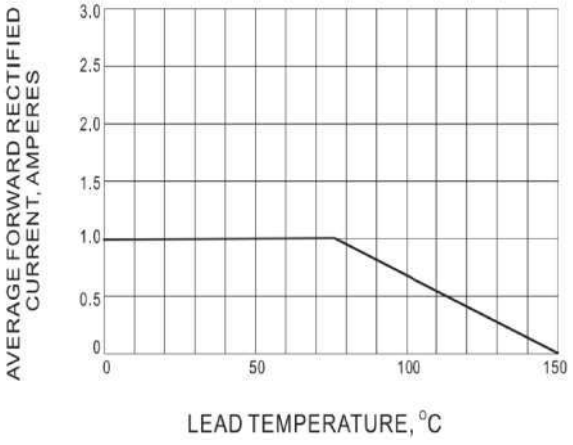

Fig.1 Forward Current Derating Curve

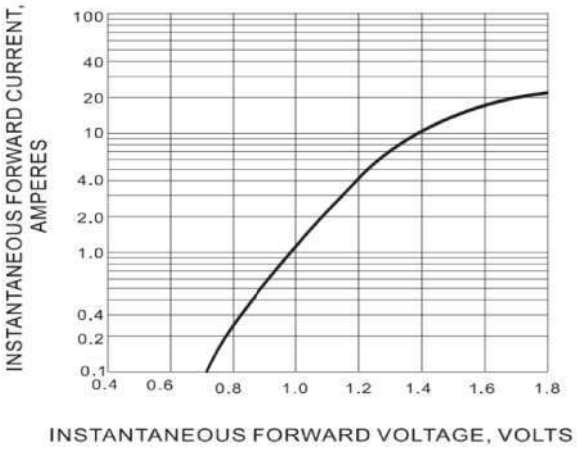

Fig. 2 Typical Instantanne eous Forward Characteristics

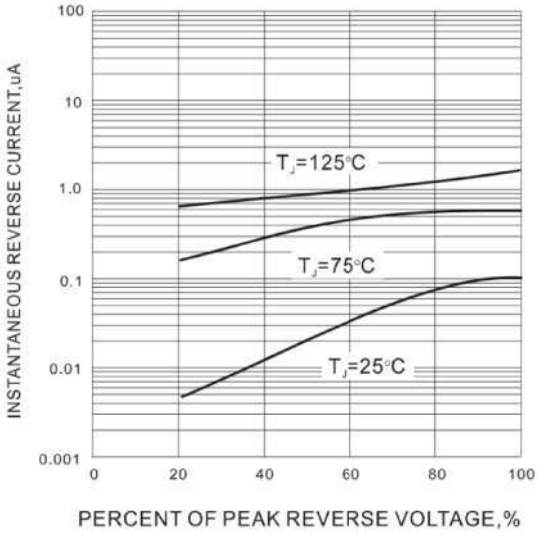

Fig.3 Typical Recerse Characteristics

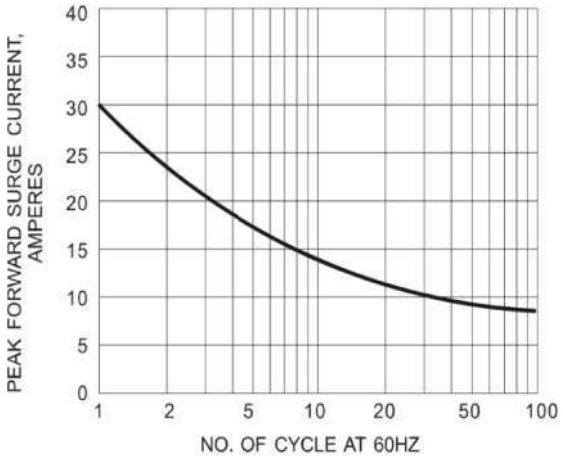

Fig.4 Max. Non- Repetitive Surge Current

Pad Layout

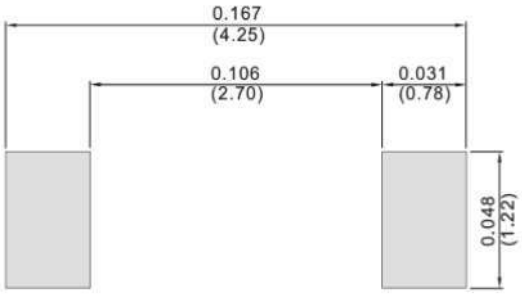

Unit: mm

Packaging Specifications

Package	W (mm)	A (mm)	B (mm)	C (mm)	d1 (mm)	d (mm)	E (mm)	F (mm)	P (mm)	P0 (mm)	P1 (mm)	T (mm)
SOD-123FL	8±0.2	2.00±0.1	3.85±0.1	1.1±0.1	1.0	1.50±0.1	1.75±0.1	3.5±0.05	4±0.1	4±0.05	2±0.05	0.23±0.05
SOD-123HE	8±0.3	2.00±0.1	4.00±0.1	1.45±0.1	1.0	1.55±0.1	1.75±0.1	3.5±0.05	4±0.1	4±0.10	2±0.05	0.23±0.10
SOD-323FL	8±0.2	1.37±0.1	2.75±0.1	0.85±0.1	1.00	1.60±0.1	1.75±0.1	3.50±0.05	4±0.1	4±0.10	-	0.20±0.10
SOD-323HE	8±0.3	1.60±0.1	2.80±0.1	0.95±0.1	1.0	1.50±0.1	1.75±0.1	3.5±0.05	4±0.1	4±0.10	2±0.05	0.23±0.10
SMAF	12±0.3	2.9±0.1	5.5±0.1	2.1±0.1	1.5	1.55±0.1	1.75±0.1	5.5±0.05	4±0.1	4±0.10	2±0.05	0.23±0.10
SMA-S	12±0.2	2.65±0.1	5.25±0.1	1.35±0.1	1.0	1.55±0.1	1.75±0.1	5.5±0.05	4±0.1	4±0.05	2±0.05	0.23±0.10
SMA-HE	12±0.2	2.65±0.1	5.25±0.1	1.35±0.1	1.0	1.55±0.1	1.75±0.1	5.5±0.05	4±0.1	4±0.05	2±0.05	0.23±0.10

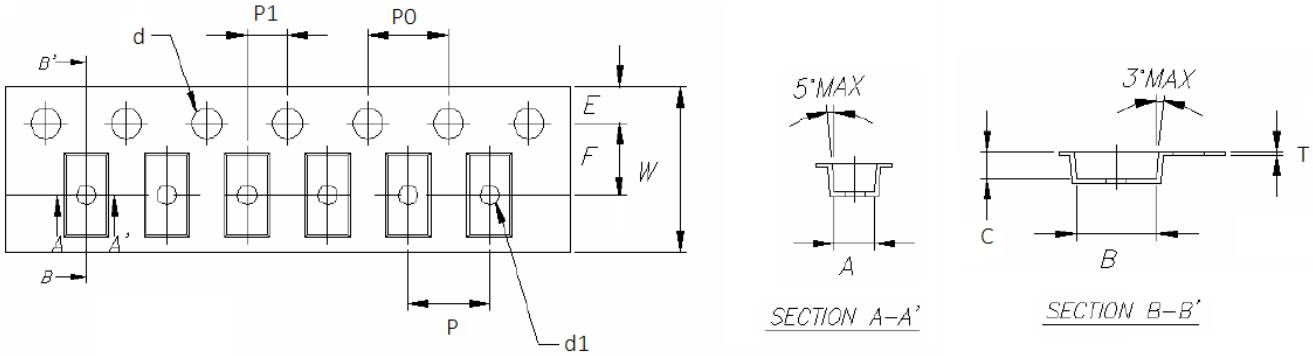

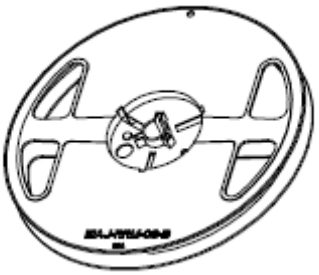

Package	D (max.) (mm)	D1 (min.) (mm)	D2 (mm)	G (min.) (mm)	W1 (min.) (mm)
SOD-123FL	178	50.0	13.0±0.2	8.4	11.4
SOD-123HE	178	50.0	13.0±0.2	8.4	11.4
SOD-323FL	178	50.2	13.0±0.2	8.0	11.5
SOD-323HE	178	50.0	13.0±0.2	8.4	11.4
SMAF	178	50.0	13.0±0.2	12.4	18.0
	330	50.0	13.0±0.2	12.4	18.0
SMA-S	178	50.0	13.0±0.2	12.4	18.0
SMA-HE	178	50.0	13.0±0.2	12.4	18.0

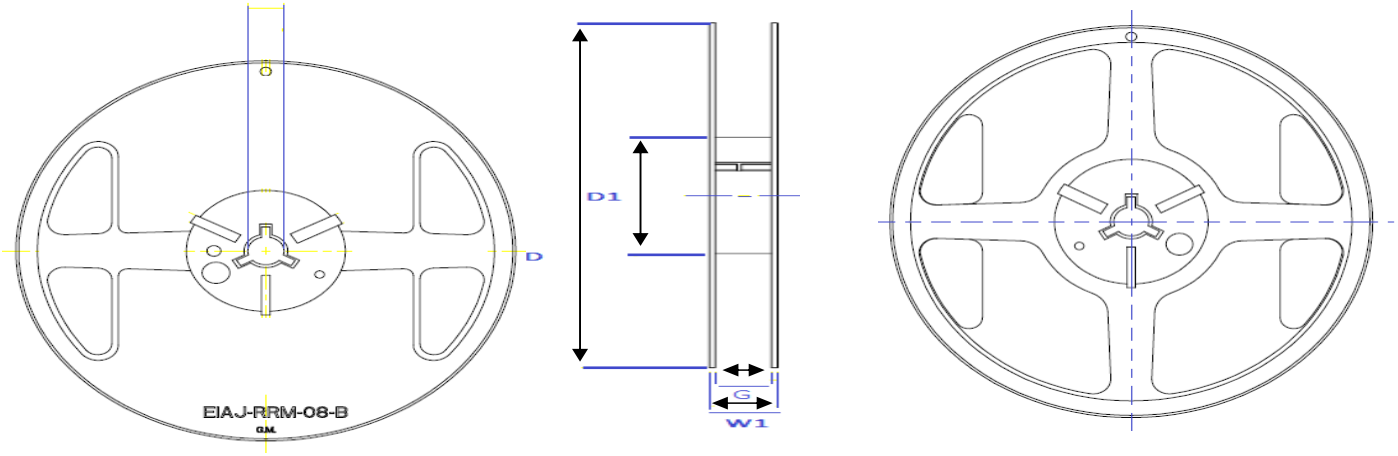

Recommand IR Reflow Soldering Thermal Profile

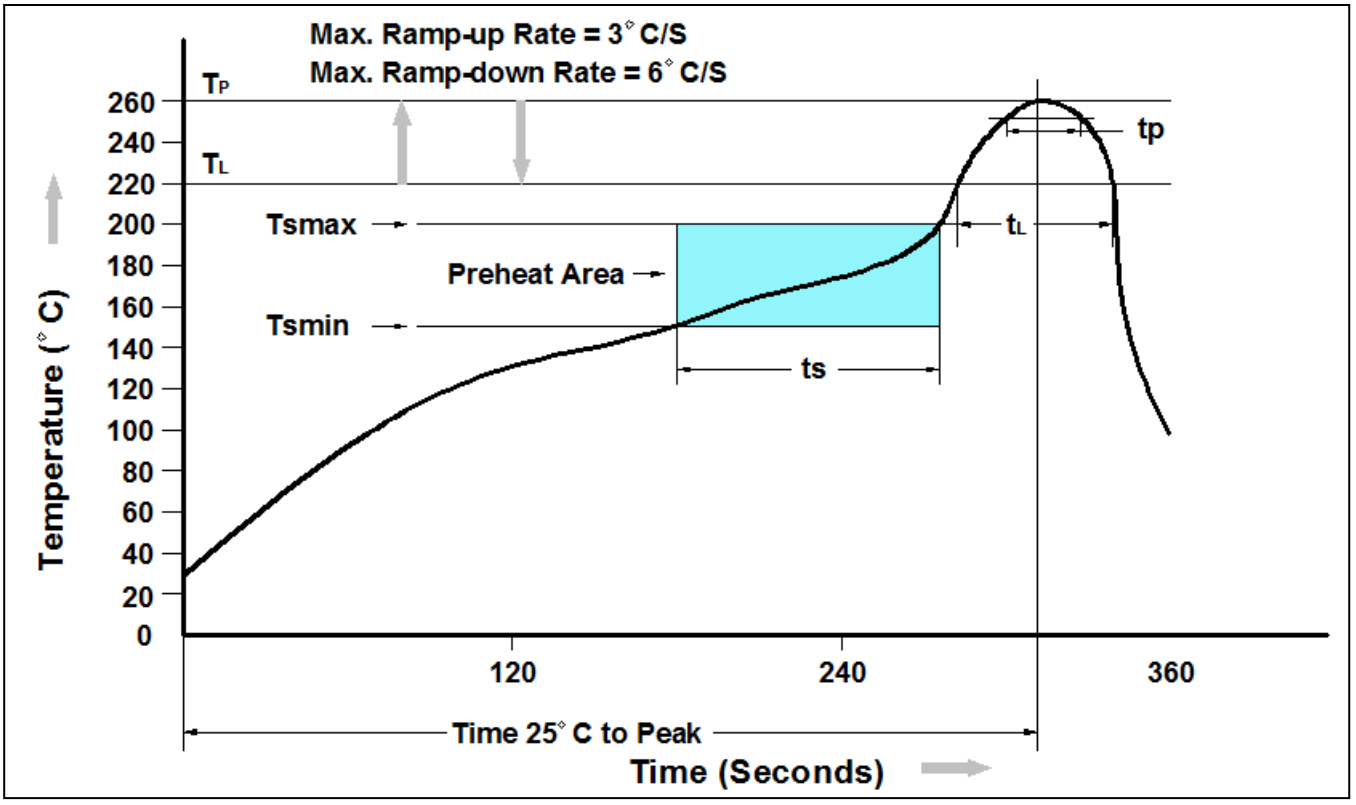

Profile Feature	Pb-Free Assembly Profile
Temperature Min. (Tsmin)	150°C
Temperature Max. (Tsmax)	200°C
Time (ts) from (Tsmin to Tsmax)	60-120 seconds
Average Ramp-up Rate (tL to tP)	3°C/second max.
Liquidous Temperature (TL)	217°C
Time (tL) Maintained Above (TL)	60 – 150 seconds
Peak Temperature	260°C +0°C / -5°C
Time (tP) within 5°C of actual Peak Temperature	30 seconds
Ramp-down Rate (TP to TL)	6°C/second max
Time 25°C to Peak Temperature	8 minutes max.

Ordering Information

Part Number	Description	Quantity
GS1000FL~GS1010FL	SOD-123FL Reel	3000 pcs

DISCLAIMER

- The information in this document and any product described herein are subject to change without notice and should not be construed as a commitment by Paceleader, Paceleader reserve the right to make changes to the information in this document.

- Though Paceleader make effort to improve product quality and reliability, Product can malfunction and fail due to their inherent electrical sensitivity and vulnerability to physical stress, it is the responsibility of the customer, when utilizing Paceleader products, to comply with the standards of safety in making a safe design for entire system and to avoid situation in which a malfunction or failure., In developing a new designs, customer should ensure that the device which shown in this documents are used within specified operating ranges.

- The information contained herein is presented only as a guide for the applications of our products. No responsibility is assumed by Paceleader for any infringements of patents or other rights of the third parties which may result from its use.